Advanced Distributor Products®

Specification Guide

S Series

Compact Wall Mount Air Handlers

Electric Heat

Contents **Page**

Nomenclature.....1
Product Features 2
Physical Data 2
Blower Performance.....3
Dimensions 3
Electrical Data.....4

Nomenclature

S M2 1 24 05

Series
S Series Wall Mount

Slab Number
M2, M3, M5, M6, M7 = Aluminum
K1, K2, K3, K6, K7, L1, L5, L6, L9 = Copper

Metering Device [1]
1 = Piston (R-410A)
9 = Non-bleed HP TXV (R-410A)

[1] Note: Pull disconnect only

Unit Size (Nominal MBTUH)
18, 24, 30, 36 = 3-speed PSC motor
19, 25, 31, 37, 39 = 5-speed ECM motor

Electric Heat [1]
05 = 5 kW (all sizes)
07 = 7.5 kW (all sizes)
10 = 10 kW (all sizes)

AHRI CERTIFIED™ www.ahridirectory.org

ETL LISTED

Product improvement is a continuous process at Advanced Distributor Products. Therefore, product specifications are subject to change without notice and without obligation on our part. Please contact your ADP representative or distributor to verify details.
© by Advanced Distributor Products. All rights reserved.

2175 West Park Place Blvd., Stone Mountain, GA 30087
www.adpnow.com

Product Features

Cabinet & General Features

- Flexible copper tubing for easy motor access.
- Low 30" height on models 18 – 37.
- Cabinets constructed of heavy-gauge, corrosion-resistant galvanized steel.
- Refrigerant connections located on top left.
- 5/8" foil-faced insulation for excellent sweat resistance and quiet operation.
- (4) Screw removal for easy access to all electrical connections.
- Dual condensate drain connections on left side, right side, and bottom of cabinet.
- 1" duct flanges on all models simplify attachment to plenums such as 1 1/2" ductboard.
- Air filter included with every air handler; no tools required for changeout.
- Decorative wall panel or closet panel available as accessory; both panels reduce published sound level.
- Wall hanging bracket available as accessory for field installation.
- Approved for installation in manufactured housing and mobile homes.

Coil Features

- AC or HP applications; R-22 & R-410A compatible.
- Light weight aluminum evaporator coil with aluminum header plate; copper coil available.
- Field or factory installed threaded expansion valve.
- Corrosion proof plastic drain pan.

Electrical Features

- 5-speed high efficiency ECM motor or PSC motor available.
- Easy to service electric heat section.
- 5, 7.5, or 10 kW heat kits standard factory installed on all models.
- Pull disconnect line voltage connection standard on all models.
- Includes thermostat connections, time delay (1 sec. on, 45 sec. off), & motor speed settings (PSC motor uses control board; functions are built into the 5-speed ECM motor).

Physical Data

		Unit Size								
		18	**19**	**24**	**25**	**30**	**31**	**36**	**37**	**39**
Available Voltages		208/240 V, 60 Hz, 1 Phase								
Maximum Elec. Heat available (kW)		10	10	10	10	10	10	10	10	10
Transformer Size and Type		40VA, Class 2								
Blower Data:	**Motor H.P.**	1/4	--	1/4	--	1/3	--	1/3	--	--
3-Speed PSC Motor	**F.L.A. @ 240 V**	1.7	--	1.7	--	2.0	--	2.0	--	--
Blower Data:	**Motor H.P.**	--	1/3	--	1/3	--	1/3	--	1/2	1/2
5-Speed High Eff. ECM Motor	**F.L.A. @ 240 V**	--	0.8	--	1.7	--	2.2	--	2.9	2.9
Wheel (dia." x width")		10 x 6	10 x 6	10 x 6	10 x 6	10 x 6	10 x 6	10 x 6	10 x 6	10 x 6
Nominal CFM		600	600	800	800	1000	1000	1200	1200	1200
Air Filter Size (in)		20 x 20	20 x 20	20 x 20	20 x 20	20 x 20	20 x 20	20 x 25	20 x 25	20 x 30
Refrigerant Conn. (IDS) Suction		3/4"	3/4"	3/4"	3/4"	3/4"	3/4"	3/4"	3/4"	3/4"
Refrigerant Conn. (IDS) Liquid		3/8"	3/8"	3/8"	3/8"	3/8"	3/8"	3/8"	3/8"	3/8"
R-410A Piston Size (in)		0.049	0.049	0.053	0.053	0.059	0.059	0.067	0.067	0.067
R-22 Piston Size (in) (for replacement only)		0.053	0.053	0.059	0.059	0.067	0.067	0.073	0.073	0.073
Pallet Quantity (min order per model number)		4	4	4	4	4	4	4	4	4
Sound Level @ 0.3 Static w/o Wall Panel (dBA) [1]		60	60	64	64	69	69	72	69	69
Copper Weights										
Max Unit Weight (lbs)		78	81	78	81	81	84	81	84	87
Max Shipping Weight (lbs)		85	90	85	90	90	95	100	105	108
Aluminum Weights										
Max Unit Weight (lbs)		73	76	73	76	76	79	76	79	--
Max Shipping Weight (lbs)		80	85	80	85	85	90	95	100	--

[1] Typical sound levels based on 240V 3-speed PSC motor.

Note: 18" clearance required in front of unit for filter and coil maintenance. Can be less if front panel is directly behind a louvered closet door; check local codes and regulations.

Note: Minimum order quantity of 4 per model number.

Blower Performance

- Heating speeds should not be reduced below factory setting.
- Different speeds can be set for cooling mode; see installation instructions.

3-Speed PSC Motor

Unit Size	Cooling Speed Setting	Airflow (CFM) vs. External Static Pressure (inches W.C.) ***				
		0.1	0.2	0.3	0.4	0.5
18	*** ^ Low - Red**	606	591	576	559	529
	Med - Blue	802	784	751	722	693
	High -Black	1046	1013	987	943	885
24	Low - Red	606	591	576	559	529
	*** ^ Med - Blue**	802	784	751	722	693
	High -Black	1046	1013	987	943	885
30	Low - Red	816	809	802	775	752
	*** ^ Med - Blue**	1000	985	970	935	889
	High -Black	1218	1175	1122	1070	1008
36	Low - Red	816	809	802	775	752
	Med - Blue	1000	985	970	935	889
	*** ^ High -Black**	1218	1175	1122	1070	1008

* Factory setting for cooling.
^ Factory setting for heating.
*** All airflow data is with a dry coil, filter, & electric heat.

5-Speed High Efficiency ECM Motor

Unit Size	Cooling Speed Setting	Airflow (CFM) vs. External Static Pressure (inches W.C.) ***				
		0.1	0.2	0.3	0.4	0.5
19	Tap 1	547	484	366	309	268
	*** Tap 2**	651	600	566	516	466
	Tap 3	695	646	617	566	544
	^ Tap 4	742	700	669	627	600
	Tap 5	758	712	682	641	625
25	Tap 1	569	453	347	264	264
	Tap 2	659	600	569	518	475
	*** Tap 3**	847	800	787	744	722
	^ Tap 4	928	901	883	846	802
	Tap 5	970	944	927	891	864
31	Tap 1	656	600	567	522	473
	Tap 2	842	800	782	739	716
	*** Tap 3**	1059	1028	1004	972	946
	^ Tap 4	1106	1084	1053	1030	1000
	Tap 5	1137	1108	1085	1055	1031
37	Tap 1	848	800	769	726	692
	Tap 2	1051	1028	1000	956	930
	*** Tap 3**	1247	1215	1188	1161	1126
	^ Tap 4	1310	1279	1254	1228	1200
	Tap 5	1364	1334	1304	1279	1250
39	Tap 1	800	783	747	725	689
	Tap 2	1034	1003	987	959	937
	*** Tap 3**	1281	1253	1228	1207	1186
	^ Tap 4	1343	1314	1290	1261	1226
	Tap 5	1367	1342	1312	1277	1239

* Factory setting for cooling.
^ Factory setting for heating.
*** All airflow data is with a dry coil, filter, & electric heat.

Dimensions

Air Handler Size	A (in)	B (in)	C (in)
18 - 37	22	18.75	29.75
39	22	18.75	35.5

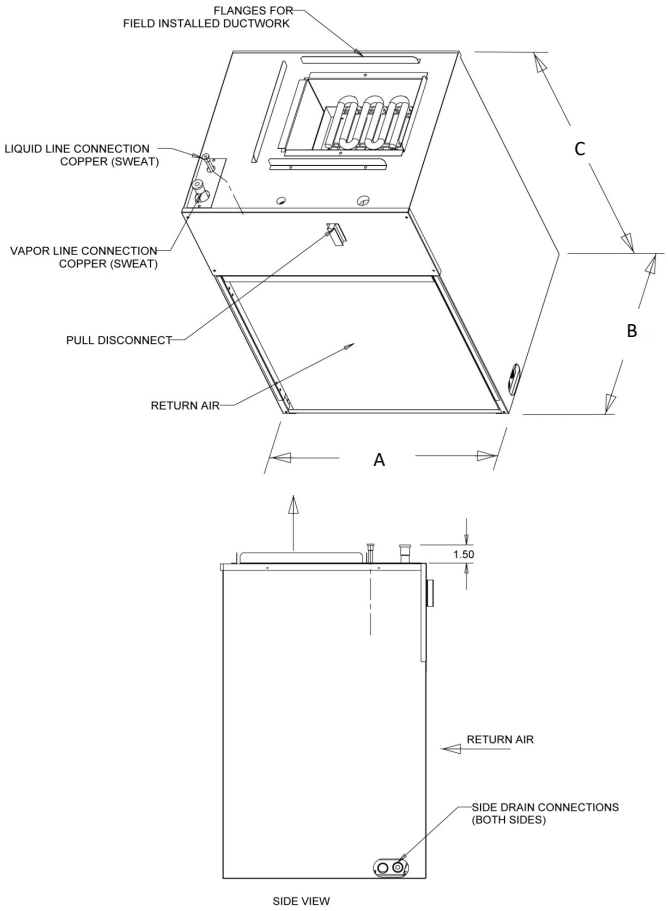

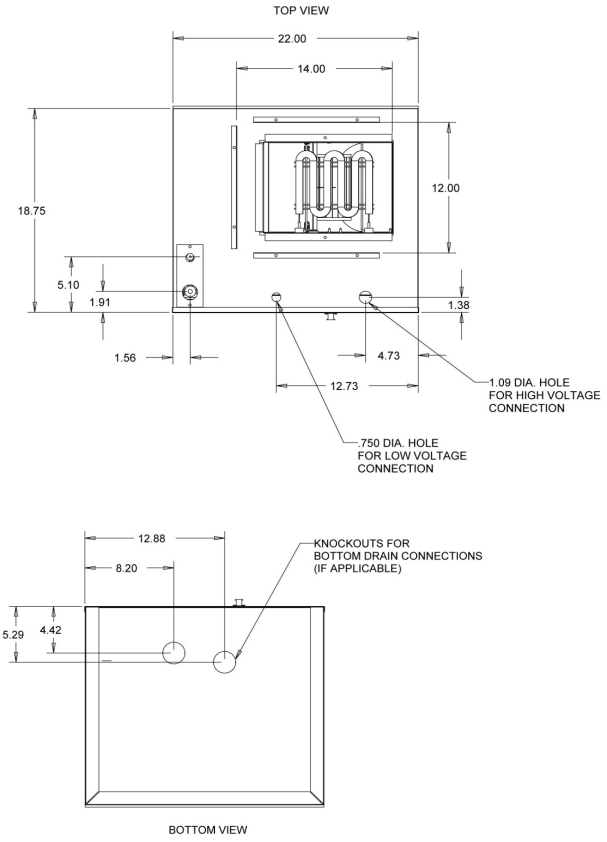

Electrical Data

3-Speed PSC Motor

Unit Size (All have electric heat)	Heating Capacity		Blower Amps		Minimum Circuit Ampacity		Circuit Breaker Amps Per Stage
	kW	BTUH					
	240 V [1]	240 V [1]	208 V	240 V	208 V	240 V	
18	5.0	17,065	1.8	1.7	24.8	28.2	30
	7.5	25,598	1.8	1.7	36.1	41.2	45
	10.0	34,130	1.8	1.7	47.4	54.2	60
24	5.0	17,065	1.8	1.7	24.8	28.2	30
	7.5	25,598	1.8	1.7	36.1	41.2	45
	10.0	34,130	1.8	1.7	47.4	54.2	60
30	5.0	17,065	2.1	2.0	25.2	28.5	30
	7.5	25,598	2.1	2.0	36.5	41.6	45
	10.0	34,130	2.1	2.0	47.8	54.6	60
36	5.0	17,065	2.1	2.0	25.2	28.5	30
	7.5	25,598	2.1	2.0	36.5	41.6	45
	10.0	34,130	2.1	2.0	47.8	54.6	60

[1] For 208 Volts use .751 correction factor for kW & MBTUH.

5-Speed High Efficiency ECM Motor

Unit Size (All have electric heat)	Heating Capacity		Blower Amps		Minimum Circuit Ampacity		Circuit Breaker Amps Per Stage
	kW	BTUH					
	240 V [1]	240 V [1]	208 V	240 V	208 V	240 V	
19	5.0	17,065	0.9	0.8	23.7	27.0	30
	7.5	25,598	0.9	0.8	35.0	40.1	45
	10.0	34,130	0.9	0.8	46.3	53.1	60
25	5.0	17,065	1.8	1.7	24.8	28.2	30
	7.5	25,598	1.8	1.7	36.1	41.2	45
	10.0	34,130	1.8	1.7	47.4	54.2	60
31	5.0	17,065	2.4	2.2	25.6	28.8	30
	7.5	25,598	2.4	2.2	36.8	41.8	45
	10.0	34,130	2.4	2.2	48.1	54.8	60
37	5.0	17,065	3.1	2.9	26.4	29.7	30
	7.5	25,598	3.1	2.9	37.7	42.7	45
	10.0	34,130	3.1	2.9	49.0	55.7	60
39	5.0	17,065	3.1	2.9	26.4	29.7	30
	7.5	25,598	3.1	2.9	37.7	42.7	45
	10.0	34,130	3.1	2.9	49.0	55.7	60

[1] For 208 Volts use .751 correction factor for kW & MBTUH.

Advanced Distributor Products®

2175 West Park Place Boulevard
Stone Mountain, GA 30087
www.adpnow.com